ASHCROFT®
Trust the shield.®

DG25 General Purpose Digital Gauge

FEATURES

- 0.5% Accuracy (0.25% option)
- Min./Max. function feature records low and high pressure events
- Nine engineering units: one field (programmable)
- All Stainless steel, laser welded wetted parts
- Push-button menu navigation
- 20 segment bar graph display
- Maxium 5-Digit numeric display
- IP67 Enclosure

TYPICAL USES

- Hydraulics and pneumatics
- Test and measurement
- Specialized OEM equipment
- Material strength testing
- Torque measurement
- Weighing

DG25
2.73″, 70 mm nominal case diameter

SPECIFICATIONS

Accuracy:	±0.5% of span (ASME B40.7 Grade 2A), ±0.25% of span (ASME B40.7 Grade 3A) (OPT.)
Case Size:	2½″
Nominal Sizes:	2.73″ (70 mm) dia., 1.61″ (40.9 mm) deep, 2.64″ (67 mm) centerline to end of ¼ NPT thread height
Character Height:	Upper line: 0.48″, (12.19 mm), 5-digit Lower line: 0.24″, (6.10 mm), 5-character alphanumeric
Ranges:	Vacuum, compound, 15 to 25,000 psi
Pressure Connection:	¼ NPT typical, see page 4 for all options
Process Connection Location:	Lower
Temperature Coefficient:	0.04% °F (-20 °F to 180 °F) zero and span Reference temperature 70 °F
Leak Integrity:	10^{-7} cc/sec
Update Rate:	1Hz, 2Hz, 4Hz
Vibration:	MIL-STD-202G, Method 201A
Shock:	MIL-STD-202G, Method 213B, Test Condition K
Serial Number:	Yes
View Angle:	12 o'clock
Battery:	Two AA alkaline batteries
Battery Life:	2,000 hours minimum
Battery Life Indicator:	4 levels
Cycle Life:	10 million cycles

KEY BENEFITS

- **Wide variety of pressure connection thread options**
- **Easily custom configured to meet unique requirements**
- **Ingress protection suitable for demanding applications**

SPECIFICATIONS

LCD Display:	Four or five-digit numeric top line (depending on range, see resolution chart on page 3), five-character alaphanumeric lower line, 20 segment vertical bar graph, four segment battery life indicator, dedicated icons for gauge timer, back light timer, tare, min. and max.
Keypad Functions:	Three key; with multi-press functionallity
Hard Keys:	**On/Off:** Power Symbol and Enter Zero **Zero:** Tare, and Up Arrow **Menu:** Access, Backlight, Down Arrow
Engineering Units:	psi, bar, in. Hg, cm Hg, mm Hg, kPa, MPa, kg/cm^2, ft. H_2O, and customer defined unit. (Some ranges may not include all units due to resolution limitations. See range chart on page 3.)
Enclosure Rating:	IP67
Approvals:	CE/UKCA, UL 61010-1, CUL

PRESSURE RATINGS

Overpressure:	Proof:	Burst:
15 to ≤2,000 psi	2X Range	8X Range
≥3,000 to ≤5,000 psi	1.5X Range	3X Range
≥7,500 to ≤20,000 psi	1.2X Range	1.5X Range

All specifications are subject to change without notice. All sales subject to standard terms and conditions.
Ashcroft® and Trust the Shield® are trademarks of Ashcroft Inc. For more information, see Ashcroft Brands & Trademarks
©2024 Ashcroft Inc. dg25_ds_RevG_10-23-24

ASHCROFT®
Trust the shield.®

DG25 General Purpose Digital Gauge

WETTED COMPONENTS		
Diaphragm	Socket	Joints
17-4 Stainless steel	316L Stainless steel	Laser welded

NON-WETTED COMPONENTS	
Case	Keypad
Polycarbonate/ABS	Polycarbonate

MIN/MAX TEMPERATURE LIMITS		
Version	Process	Storage
DG25	-4 °F to 140 °F (-20 °C to 60 °C)	-4 °F to 140 °F (-20 °C to 60 °C)
Batteries removed	—	-4 °F to 176 °F (-20 °C to 80 °C)

ORDERING CODE Example:	DG	25	3	1	L	1	NA	M02	L	1000#	-XC4
Model											
DG - DG25	DG										
Dial Size											
25 - 2.5″		25									
Accuracy											
3 - ±0.25% of span			3								
5 - ±0.5% of span											
Type											
1 - Battery				1							
Backlight											
L - Backlight					L						
N - No backlight											
Protective Boot											
0 - None											
1 - Black						1					
2 - Orange											
Electrical Connection											
NA - Not Applicable							NA				
Process Connection Size											
F09 - 9/16-18 UNF-2B internal thread, high pressure											
M01 - ⅛ NPT Male											
M02 - ¼ NPT Male								M02			
M04 - ½ NPT Male											
M75 - No thread for seal weld											
MD2 - ¼ NPTF Male dry seal, high pressure											
MG2 - G¼ B Male											
MGA - G¼ A Male											
MKJ - ¼ -19 BSP Male with shaft											
MLF - ½ NPT Male with 7/16-20 UNJF-3B internal thread											
MR4 - R ¼ Male											
MS2 - ¼ -19 BSP Male											
Process Connection Location											
L - Lower									L		
T - Top											
Range (coding example, see range table below for all standard ranges)											
1000# - 0-1,000 psi										1000#	
Options (if choosing an option(s), must include an "X")											X__
B3 - Gauge pouch with Ashcroft® logo											
C4 - Traceable calibration certificate											C4
NH - Metal tag wired to case											
OB - Generic non-branded key panel											
QX - Epoxy potted stem (10 unit minimum)											
6B - Cleaned for gaseous oxygen service											
6W - Cleaned to ASME B40.100 level IV, NOT marked for gaseous oxygen service											

Consult factory for: Custom configurations, OEM requirements, traceable calibration certificate, cleaned for gaseous oxygen service, gauge pouch with Ashcroft® logo, other ranges and mounting options

All specifications are subject to change without notice. All sales subject to standard terms and conditions.
Ashcroft® and Trust the Shield® are trademarks of Ashcroft Inc. For more information, see Ashcroft Brands & Trademarks
©2024 Ashcroft Inc. dg25_ds_RevG_10-23-24

ASHCROFT®
Trust the shield.®

DG25 General Purpose Digital Gauge

Standard psi ranges

RANGE CODE	psi		bar		in. Hg		cm Hg		mm Hg		kPa		MPa		kg/cm²		ft. H_2O	
	Low Range	High Range	Low Range	High Range	Low Range	High Range	Low Range	High Range	Low Range	High Range	Low Range	High Range	Low Range	High Range	Low Range	High Range	Low Range	High Range
Vacuum																		
0#&V*	-14.500	0	-0.9998	0	-29.52	0	-74.99	0	-749.99	0	-99.97	0	-0.1000	0	-1.0195	0	-33.46	0
Compound																		
15#&V*	-14.500	15.00	-0.9998	1.0342	-29.52	30.54	-74.99	77.57	-749.9	775.5	-100.0	103.4	-0.1000	0.1034	-1.0195	1.0546	-33.46	34.62
30#&V*	-14.500	30.00	-1.000	2.068	-29.52	61.08	-74.99	155.15	-749.9	1551.5	-100.0	206.8	-0.1000	0.2068	-1.019	2.109	-33.46	69.23
60#&V	-14.500	60.00	-1.000	4.137	-29.52	122.16	-75.0	310.3	-750	3103	-100.0	413.7	-0.1000	0.4137	-1.019	4.219	-33.46	138.46
100#&V	-14.500	100.00	-1.000	6.895	-29.5	203.6	-75.0	517.2	-750	5172	-100.0	689.5	-0.1000	0.6895	-1.019	7.031	-33.46	230.8
300#&V	-14.500	300.00	-1.000	20.685	-29.5	610.8	-75.0	1551.5	-750	1551	-100.0	2068.4	-0.1000	2.0684	-1.019	21.093	-33.46	692.3
Pressure																		
15#*	0	15.000	0	1.0342	0	30.54	0	77.57	0.0	775.5	0	103.2	0	0.1034	0	1.0546	0	34.62
30#	0	30.00	0	2.0685	0	61.08	0	155.15	0.0	1551.5	0	206.4	0	0.2068	0	2.1093	0	69.23
60#	0	60.00	0	4.137	0	122.16	0	310.3	0	3103	0	413.7	0	0.4137	0	4.219	0	138.46
100#	0	100.00	0	6.895	0	203.60	0	517.2	0	5172	0	689.5	0	0.6895	0	7.031	0	230.77
200#	0	200.00	0	13.790	0	407.2	0	1034.3	0	10343	0	1378.9	0	1.3789	0	14.062	0	461.5
300#	0	300.0	0	20.685	0	610.8	0	1551.5	0	15515	0	2068.4	0	2.0684	0	21.093	0	692.3
500#	0	500.0	0	34.47	0	1018.0	0	2586	-	-	0	3447	0	3.447	0	35.15	0	1153.8
1000#	0	1000.0	0	68.95	0	2036.0	0	5172	-	-	0	6895	0	6.895	0	70.31	0	2307.7
1500#	0	1500.0	0	103.42	0	3054	0	7757	-	-	0	10342	0	10.342	0	105.46	0	3462
2000#	0	2000.0	0	137.90	0	4072	0	10343	-	-	0	13789	0	13.789	0	140.62	0	4615
3000#	0	3000	0	206.8	0	6108	0	15515	-	-	-	-	0	20.684	0	210.93	0	6923
5000#	0	5000	0	344.7	0	10180	-	-	-	-	-	-	0	34.47	0	351.5	0	11538
10000#	0	10000	0	689.5	0	20360	-	-	-	-	-	-	0	68.95	0	703.1	0	23077
15000#(1)	0	15000	0	1034.2	-	-	-	-	-	-	-	-	0	103.42	0	1054.6	-	-
20000#(1)	0	20000	0	1379.0	-	-	-	-	-	-	-	-	0	137.89	0	1406.2	-	-
25000#(1)	0	25000	0	1723.7	-	-	-	-	-	-	-	-	0	172.37	0	1757.7	-	-

Standard bar ranges

RANGE CODE	bar		psi		in. Hg		cm Hg		mm Hg		kPa		MPa		kg/cm²		ft. H_2O	
	Low Range	High Range	Low Range	High Range	Low Range	High Range	Low Range	High Range	Low Range	High Range	Low Range	High Range	Low Range	High Range	Low Range	High Range	Low Range	High Range
Vacuum																		
0BR&V	-1.000	0	-14.50	0	-29.53	0	-75.01	0	-750.1	0	-100.0	0	-0.10000	0	-1.0197	0	-33.52	0
Compound																		
1BR&V	-1.000	1.0000	-14.50	14.50	-29.53	29.53	-75.01	75.01	-750.1	750.1	-100.0	100.00	-0.1000	0.1000	-1.0197	1.0197	-33.52	33.52
1.6BR&V	-1.000	1.6000	-14.50	23.01	-29.53	47.25	-75.01	120.01	-750.1	1200.1	-100.0	160.00	-0.1000	0.1600	-1.020	1.632	-33.52	53.63
4BR&V	-1.000	4.000	-14.50	58.01	-29.53	118.12	-75.0	300.0	-750	3000	-100.0	400.0	-0.1000	0.4000	-1.020	4.079	-33.52	134.08
6BR&V	-1.000	6.000	-14.50	87.02	-29.5	177.18	-75.0	450.0	-750	4500	-100.0	600.0	-0.1000	0.6000	-1.020	6.118	-33.5	201.1
16BR&V	-1.000	16.000	-14.50	232.10	-29.5	472.5	-75.0	12001	-750	12001	-100.0	1600.0	-0.1000	1.600	-1.020	16.315	-33.5	536.3
Pressure																		
1BR*	0	1.0000	0	14.503	0	29.53	0	75.01	0.0	750.1	0	100.00	0	0.10000	0	1.0197	0	33.52
1.6BR*	0	1.6000	0	23.205	0	47.25	0	120.01	0.0	1200.1	0	160.00	0	0.16000	0	1.6315	0	53.63
2.5BR	0	2.500	0	36.25	0	73.83	0	187.52	0	1875	0	250.0	0	0.2500	0	2.549	0	83.80
4BR	0	4.000	0	58.01	0	118.12	0	300.0	0	3000	0	400.0	0	0.4000	0	4.079	0	134.08
6BR	0	6.000	0	87.02	0	177.18	0	450.0	0	4500	0	600.0	0	0.6000	0	6.118	0	201.12
10BR	0	10.000	0	145.03	0	295.3	0	750.1	0	7500	0	1000.0	0	1.0000	0	10.297	0	335.2
16BR	0	16.00	0	232.05	0	472.5	0	1200.1	0	12001	0	1600.0	0	1.6000	0	16.315	0	536.3
25BR	0	25.00	0	362.5	0	738	0	1875.2	0	18752	0	2500	0	2.5000	0	25.49	0	838.0
40BR	0	40.00	0	580.1	0	1181.2	0	3000	-	-	0	4000	0	4.000	0	40.79	0	1340.8
60BR	0	60.00	0	870.2	0	1771.8	0	4500	-	-	0	6000	0	6.000	0	61.18	0	2011.2
100BR	0	100.00	0	1450.3	0	2953	0	7500	-	-	-	10000	0	10.000	0	101.91	0	3352
160BR	0	160.00	0	2320.5	0	4725	0	12001	-	-	-	16000	0	16.000	0	163.15	0	5363
250BR	0	250.0	0	3626	0	7383	0	18752	-	-	-	-	0	25.00	0	254.9	0	8380
400BR	0	400.0	0	5801	0	11812	-	-	-	-	-	-	0	40.00	0	407.9	0	13408
600BR	0	600.0	0	8702	0	17718	-	-	-	-	-	-	0	60.00	0	611.8	0	20112
1000BR	0	1000.0	0	14503	-	-	-	-	-	-	-	-	0	100.00	0	1019.7	-	-
1600BR(1)	0	1600.0	0	23205	-	-	-	-	-	-	-	-	0	160.00	0	1631.5	-	-

* 0.5% Accuracy only.

(1) Requires use of pressure connection F09 or MD2

Note "-" in range table indicates unit of pressure is not included in this pressure range

All specifications are subject to change without notice. All sales subject to standard terms and conditions.
Ashcroft® and Trust the Shield® are trademarks of Ashcroft Inc. For more information, see Ashcroft Brands & Trademarks
©2024 Ashcroft Inc. dg25_ds_RevG_10-23-24

DG25 General Purpose Digital Gauge

DIMENSIONS

For reference only, consult Ashcroft for specific dimensional drawings.

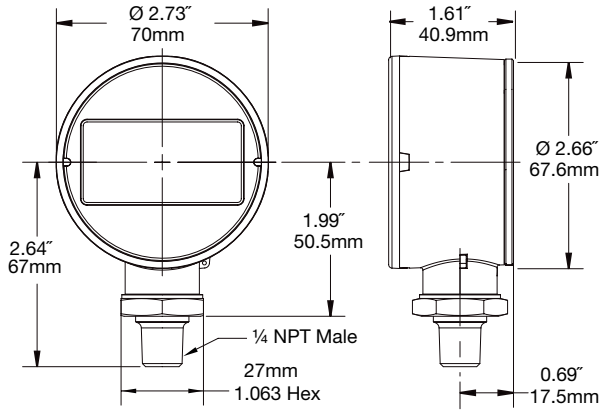

⅛ NPT Male (M01)

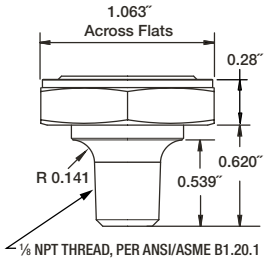

¼ NPT Male (M02)

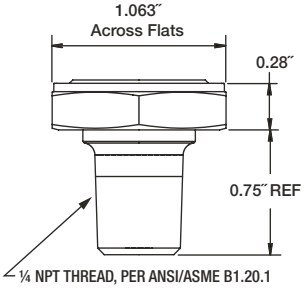

G¼B NPT Male (MG2)

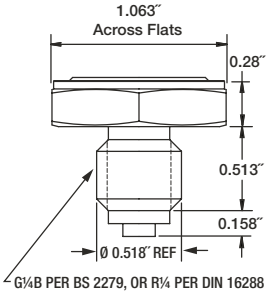

½ NPT Male (M04)

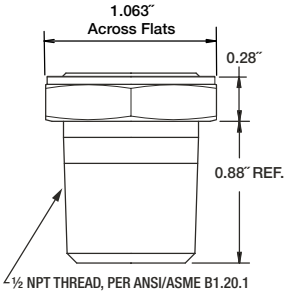

½ NPT Male & 7/16–20 UNJF-3B (MLF)

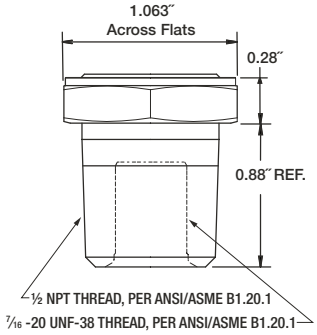

¼-19 BSP (MS2)

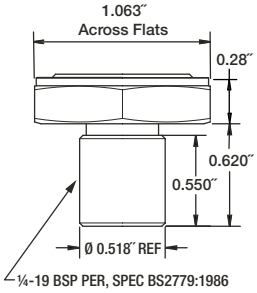

No Threads (M75)

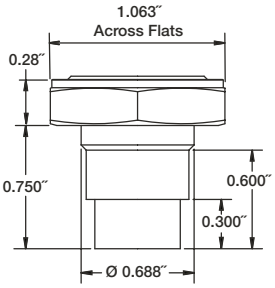

¼ NPTF Class 1 (male dry seal) (MD2)

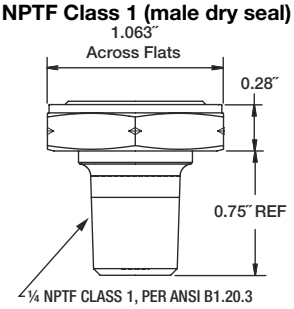

¼-19 BSP Male w /Center Shaft (MKS)

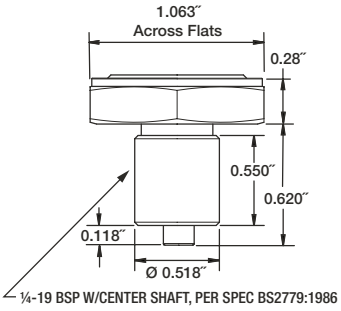

9/16-18 Internal Thread (F09)

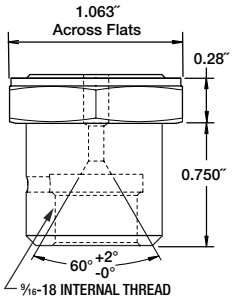

G¼A-19 Stud End (MGA)

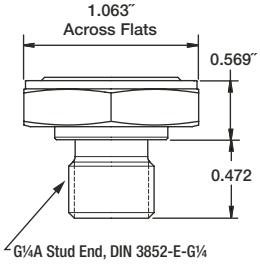

R¼ Thread (MR4)

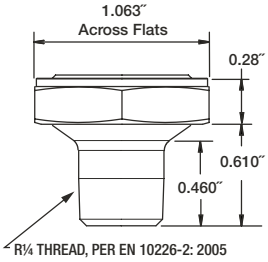

All specifications are subject to change without notice. All sales subject to standard terms and conditions.
Ashcroft® and Trust the Shield® are trademarks of Ashcroft Inc. For more information, see Ashcroft Brands & Trademarks
©2024 Ashcroft Inc. dg25_ds_RevG_10-23-24